TIPPMANN™

PRO/CARBINE™
BASIC PARTS LIST

WARNING

DO NOT DISASSEMBLE THIS MARKER WHILE IT IS PRESSURIZED WITH AIR. DO NOT PRESSURIZE A PARTIALLY ASSEMBLED MARKER.

INTERNAL VALVE PARTS NOT SHOWN:
CA-27A Front Valve Seat Ca
CA-27N Rear Valve Seat
CA-29 Cup Seat
CA-30N Valve Stem
PA-28 Cup Seal
PA-31A Valve Snap Ring
PA-32 Valve Spring
NOTE: Valve Disassembly is not recommended.

NOT SHOWN:
4-PA Sling Swivel
5-PA Sling
5-PA1 Sling Keeper

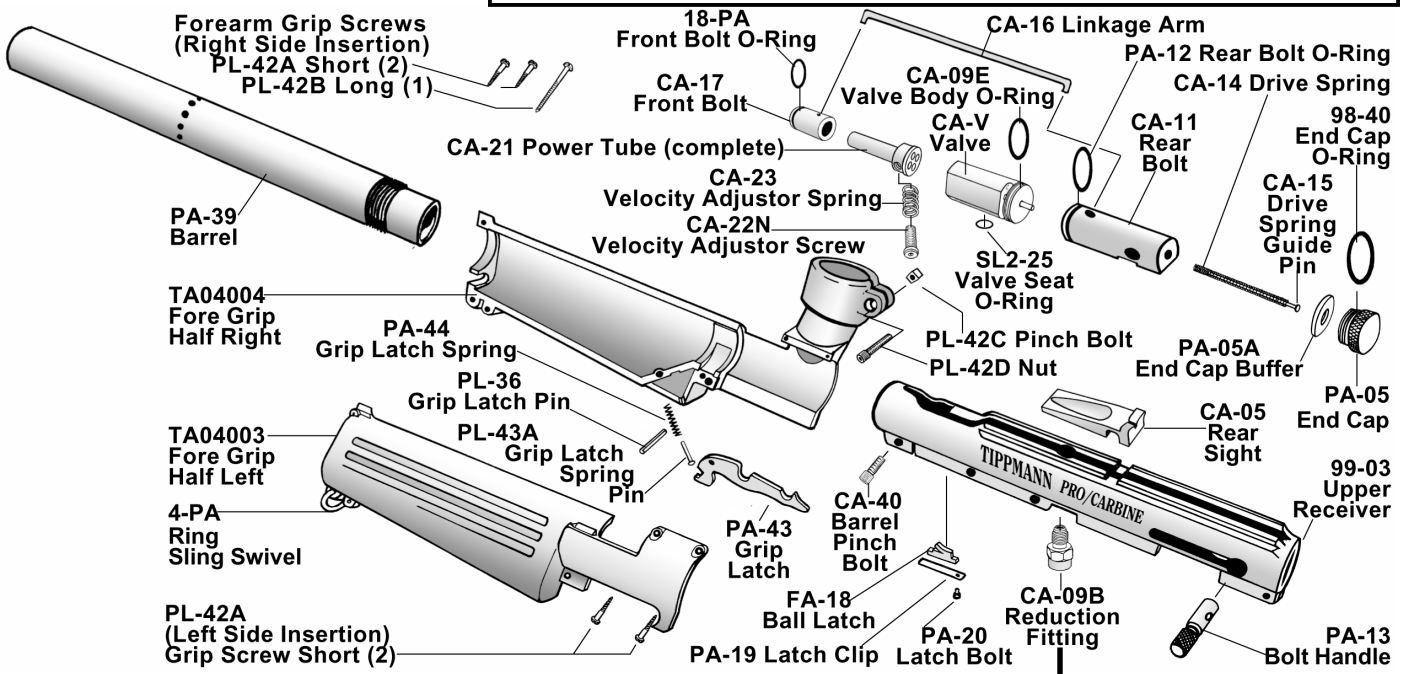

Lower Receiver

Assembly Instructions
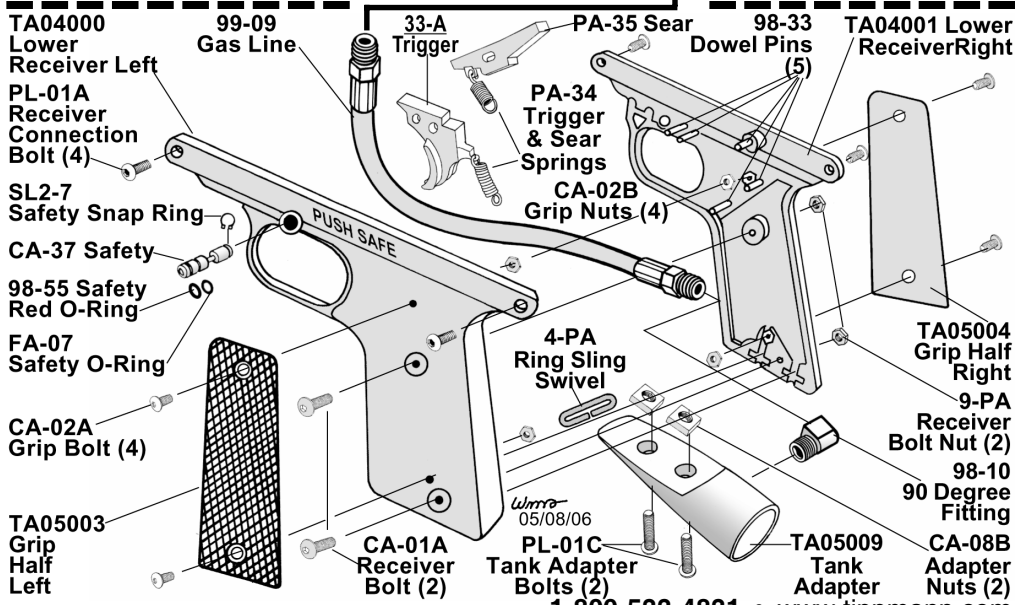
❑ Into the lower receiver halves; insert 4 grip nuts. ❑ Attach the 2 grips with ❑ 4 grip bolts. Into the right lower receiver insert ❑ trigger / sear and springs on ❑ 5 receiver dowel pins. ❑ Insert the 2 tank adapter nuts. ❑ Bolt the 2 halves together with 2 receiver bolts and nuts. ❑ Insert the safety with o-ring and ❑ secure with safety snap ring. ❑ Insert the 90 degree gas line fitting into the tank adapter and ❑ attach it to the bottom of lower receiver using 2 tank adapter bolts. ❑ Then attach the lower and upper receivers with 4 receiver connection bolts. ❑ Connect one end of the gas line (with teflon paste) to the 90 degree tank adapter fitting and ❑ attach the other end of the gas line (with teflon paste) to the upper receiver marker valve reduction fitting.